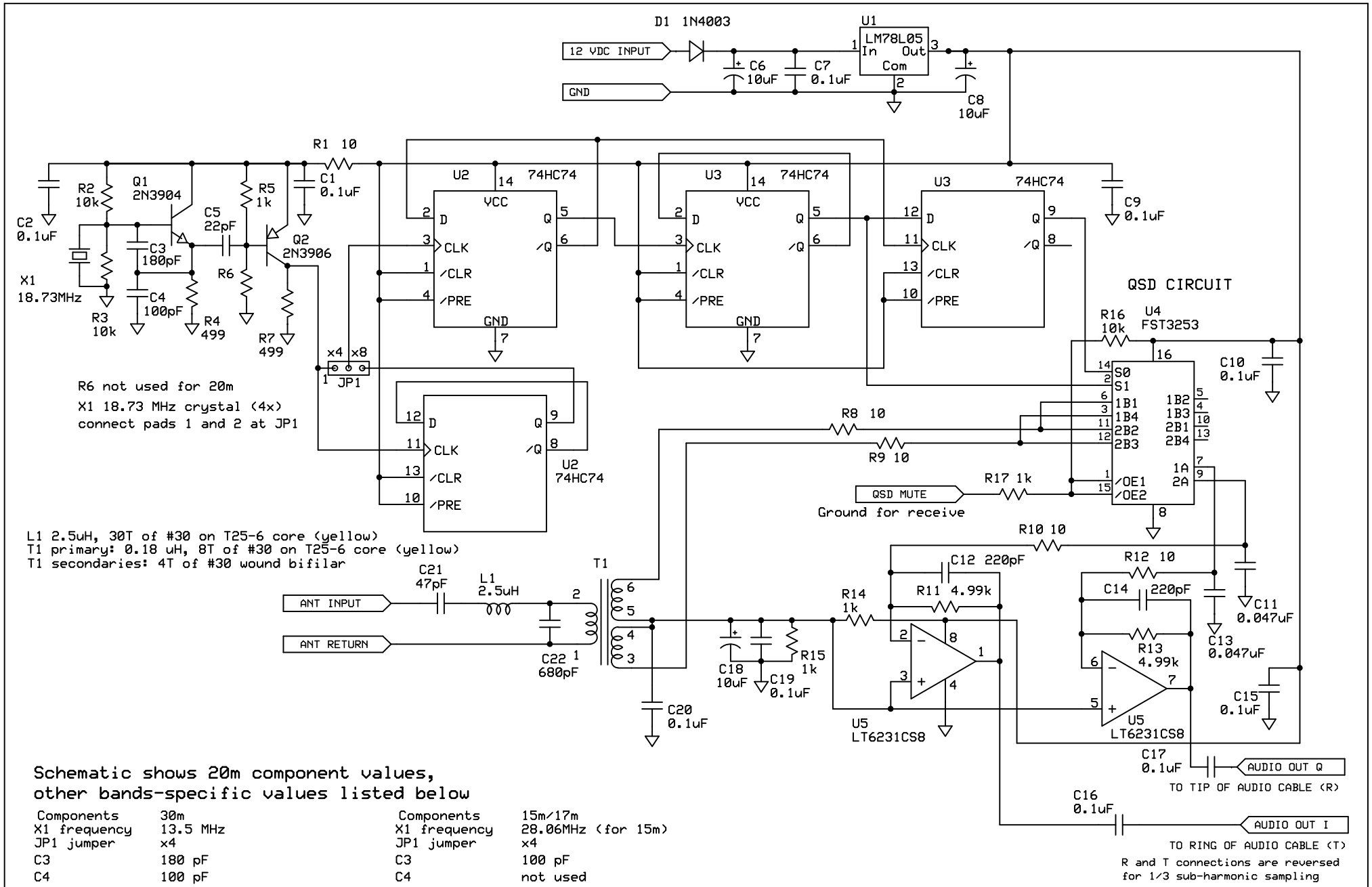

Schematic shows 20m component values,
other bands-specific values listed below

Components	30m
X1 frequency	13.5 MHz
JP1 jumper	x4
C3	180 pF
C4	100 pF
C21	68 pF
C22	1000 pF
R6	22.1k
L1	3.5uH 36T,#30,T25-6 (yellow)
T1 primary	0.28uH 10T,#30,T25-6 (yellow)
T1 secondaries	5T,bifilar,#30

Components	15m/17m
X1 frequency	28.06MHz (for 15m)
JP1 jumper	x4
C3	100 pF
C4	not used
C21	56 pF
C22	390 pF
R6	not used
L1	1.0uH 19T,#30,T25-6 (yellow)
T1 primary	0.18uH 8T,#30,T25-6 (yellow)
T1 secondaries	4T,bifilar,#30

SoftRock Projects

Upgraded v6.2 SoftRock Lite, 30m-20m-15m

Tony KB9YIG	Rev 1 6/25/08	Page 1 of 1